REV	Description	DATE	BY
1.0	First release	2023/3/23	Linus.Liao

Seeed Studio

TITLE: XIAO ESP32S3 Exp. Board v1.0

Design: | Check:

Date: 2023/3/24 18:36 | Vision: | Sheet: 1/1

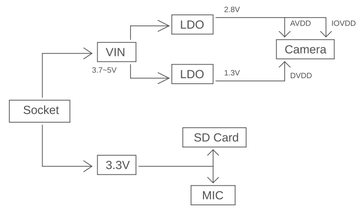

Seeed Studio

TITLE: XIAO ESP32S3 Exp. Board v1.0

Design: | Check:

Date: 2023/3/24 18:36 | Vision: | Sheet: 1/1

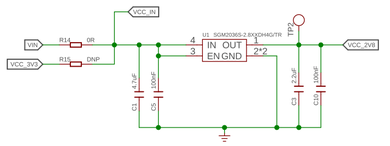

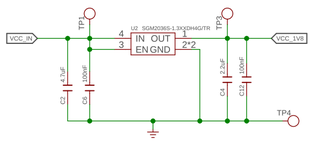

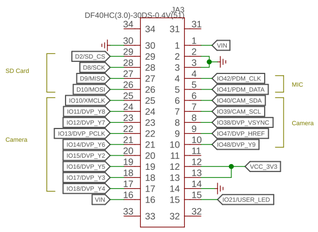

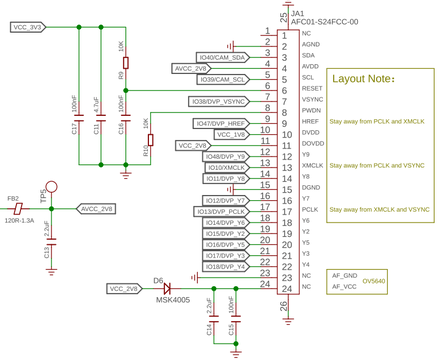

Seeed Studio

TITLE: XIAO ESP32S3 Exp. Board v1.0

Design: | Check:

Date: 2023/3/24 18:36 | Vision: | Sheet: 1/1

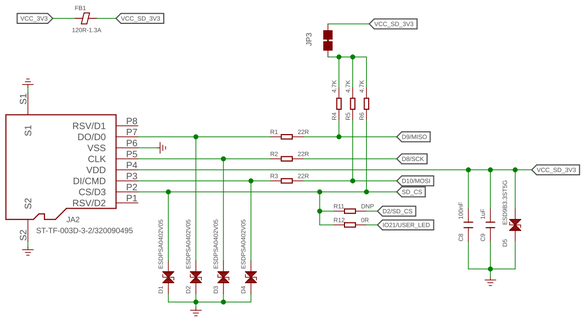

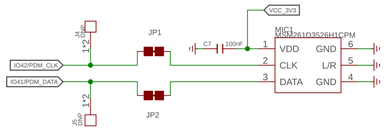

Seeed Studio

TITLE: XIAO ESP32S3 Exp. Board v1.0

Design: | Check:

Date: 2023/3/24 18:36 | Vision: | Sheet: 1/1